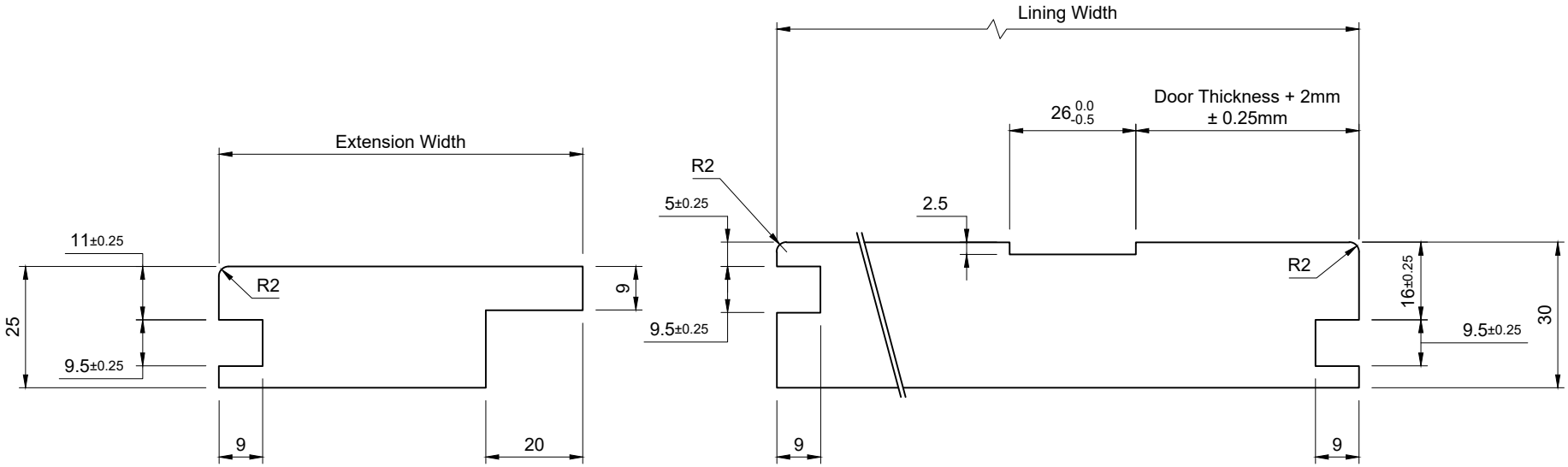

Notes:

Extension Head Length = Lining Head Length
Extension Head Rebate = Extension Head Length - 50mm
Extension Head Rebate Depth = 11mm
Extension Jamb Length = Lining Jamb Length - 2mm

Extension Architrave Head Length = Lining Architrave Head Length
Extension Architrave Jamb Length = Lining Architrave Jamb Length

Note: For Planning / Contracts Extension Width = Average Wall Width - 125mm + 10mm Giving +/- 10mm To The Extension
Fit Brackets To The Extension Lining

NB. Extension Jamb Lengths & Architrave Lengths **Exclude** Any Threshold Thickness Fitted To The Bottom Of The Frame.
Please Add This Thickness To Dimensions When Required.

Do Not Scale. If In Doubt Ask!

Description: 30mm MDF Lining with 25mm MDF Extension - NFR - Standard Stop - Extension To Push Side - Q2F Both Sides				©Doorpac Limited
doorpac creating the perfect opening	Unit 6, Ranskill Court, Sheffield, S9 5FZ.	Size: See Above	Drawing No: DP17159	
		Tolerance: +/- 0.5mm	Drawn By: P. Brash	Revision: 01
		Fire Rating: NFR	Approved: J. Withers	Drawn Date: 03/09/19
				All Dimensions Are In mm Unless Stated.